Rotary cam switches

BSW 819-493-12K3
Order Code: BSW000U

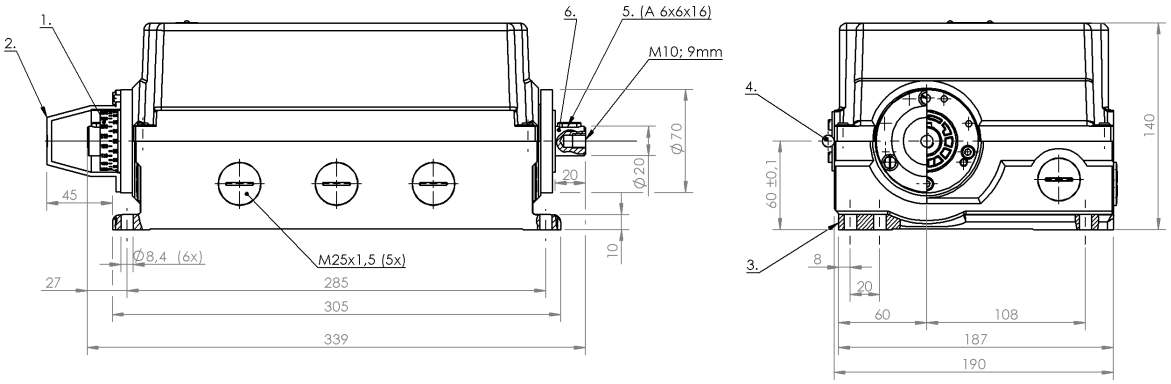

1) Scale ring, 2) Cover, 3) Reference edge, 4) Hinge, 5) Feather key, 6) Drive right-side

Basic features

Approval/Conformity	CE UKCA CCC WEEE
Basic standard	IEC 60947-5-1
Operating principle	1. Switch position: Mechanical
Version	Snap contact

Electrical connection

Connection type	1. Switch position: Cable fitting via threaded insert

Electrical data

Cable entries, number	5 threaded exit M25
Continuous current	1-12. Switch position: 6 A
Rated operating voltage Ue	1-12. Switch position: 250 V AC
Speed max.	200 1/min
Speed monitor	None

Environmental conditions

Ambient temperature	-5...80 °C
IP rating	IP65

Functional safety

B10d (EN ISO 13849-1)	BSE 44.0: 30 mil. switching cycles
BG certified	no

Material

Housing material	Aluminium, Anodized
Housing material, surface protection	Anodized
Material contacts	1-12. Switch position: Silver, gold plated

Mechanical data

Cam rings	1-12. Switch position: 180°
Cam rings can be secured	no
Connection cross-section	1.5 mm²
Dimension	305 x 140 x 187 mm
Drive shaft, length	20.00 mm
Drive type	right
Life expectancy mechanical	1. Switch position: 30 mil. switching operations
Minimum torque	2.0 Nm
Mounting hold spacing B	285.0 mm
Rotation direction monitoring	no
Switching element	1-12. Switch position: BSE 44.0

Range/Distance

Opening angle min.	15°

Wiring Diagrams
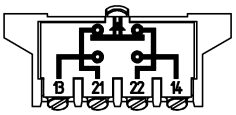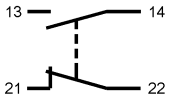
BSE 44.0